DWG NO.	SH	REV.

REVISIONS				
	REV	DESCRIPTION	DATE	APPROVED

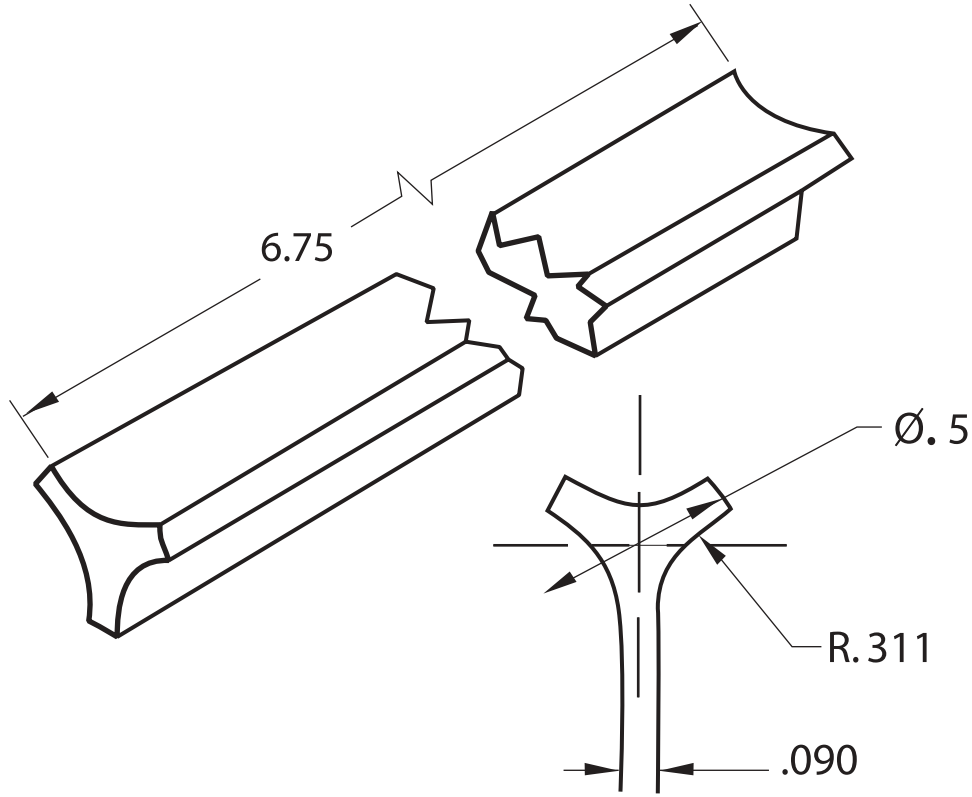

QTY REQD		FSCM NO	PART OR IDENTIFYING NO	NOMENCLATURE OR DESCRIPTION	MATERIAL SPECIFICATION	ITEM NO

PARTS LIST

UNLES OTHERWISE SPECIFIED
DIMENSIONS ARE IN INCHES
TOLERANCES ARE:

FRACTIONS	DECIMALS	ANGLES
+	.XX=	+
−	.XXX=	−

DO NOT SCALE DRAWING

TREATMENT

FINISH

SIMILAR TO | ACT. WT | CALC. WT

CONTRACT NO.

APPROVALS	DATE
DRAWN	
CHECKED	
ISSUED	

BORDERSCAPES Ph. 952-226-6800
P.O. BOX 295
PRIOR LAKE, MN 55372

TITLE

WALLPIN

SIZE	FSCM NO.	DWG NO.

SCALE 1:1 | SHEET 1 OF 1